Technical BULLETIN

©2015 YAMAHA MOTOR CORPORATION, U.S.A.

SAFETY RECALL

This modification has top priority. This bulletin must be performed immediately to ensure customer safety.

NOTE: Bulletins that announce a recall will have an "R" at the end of the bulletin number.

ALL 2015 YZF-R1M MODELS

FACTORY MODIFICATION CAMPAIGN – Transmission Gears

INTRODUCTION

Yamaha Motor Corporation, U.S.A. has decided that a defect which relates to motor vehicle safety exists in all 2015 YZF-R1 and YZF-R1M motorcycles. In affected motorcycles, both second gear wheel and pinion gears in the transmission may break as a result of extremely high stress and/or improper shifting. This is due to inadequate component strength and stress concentration at the gear teeth bottom land. In addition, the third and fourth wheel gears may be deformed or break as a result of excessive stress caused by hard usage. This is due to inadequate component strength. If gears fail, the transmission could lock up, causing loss of control that could result in a crash with injury or death.

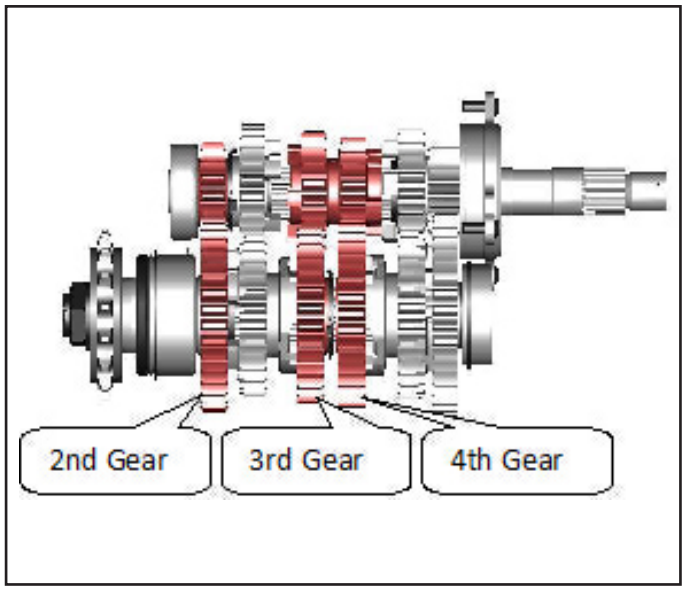

To correct this defect, Yamaha is initiating a Factory Modification Campaign. Affected units must have the transmission assembly replaced with one that includes gears of a different design.

Yamaha is notifying all registered owners of affected motorcycles by mail. A copy of this letter is included in this bulletin. The customer should take this letter along with the affected motorcycle to an authorized Yamaha dealer for modification.

If your dealership was invoiced one or more affected units, a computer report listing all affected motorcycles invoiced to your dealership is included with this bulletin. Use the list to help ensure all motorcycles are modified. All sold motorcycles that have been registered with Yamaha will show the customer's name and address.

Your dealership must notify the owner of any affected motorcycle that was actually sold but listed as "unsold" in the report. You must modify all affected motorcycles in your inventory as well as all customer-owned motorcycles brought to you for this service. Any affected motorcycle that you purchase from Yamaha in the future may also require modification. If you purchase a motorcycle from another dealer or Yamaha, check to see if the procedures in this bulletin have already been performed before you sell the motorcycle.

Motorcycles that are affected should not be operated until they are modified. It is a violation of Yamaha policy for your dealership to deliver any affected motorcycle to customers until the procedures in this bulletin are performed.

When the modification on each motorcycle is performed, follow the Warranty Information section of this bulletin to receive reimbursement. Be sure to use the Factory Modification Campaign procedures in Chapter 7 of the **Warranty and Y.E.S. Handbook** (LIT-11760-00-08).

DEALER ACTION SUMMARY

Unsold and Sold Units: Using Unit Status on YDS, check to be sure the unit is in the affected range and is unmodified. If so, replace the transmission gears and related components with those in the YZF-R1 Transmission Kit as described in this bulletin.

Parts: Yes. Order a YZF-R1 Transmission Kit for each affected unit. You will also need Yamalube® Full Synthetic 15W-50 engine oil and Yamacool® High Performance Antifreeze, or an equivalent.

Warranty: Factory Modification Campaign. See the Warranty Information section of this bulletin. This modification applies to all affected units regardless of ownership or warranty status.

Notify Customers: Yes, you must immediately contact any customer whose motorcycle shows as unregistered on the enclosed report. Yamaha has sent letters to customers whose motorcycles were registered with Yamaha as of */*/2015.

AFFECTED RANGE

All 2015 YZFR1MF
All 2015 YZFR1MFC
All 2015 YZF-R1F
All 2015 YZF-R1FC

SERVICE PROCEDURES

NOTE: These procedures are meant to be used in conjunction with the Service Manual (LIT-11616-28-52) to complete this modification. Read and understand these instructions completely prior to beginning work on the unit. You must replace the engine oil using Yamalube® Full Synthetic 15W-50 (P/N: LUB-15W50-FS-12) and also replace the coolant, using Yamacool® High Performance Antifreeze, or an equivalent, as part of the modification on this engine.

ENGINE REMOVAL

1. Remove the rider's seat, fuel tank, and both side cowlings from the motorcycle. When removing the plastic tray holding the ECU on the left hand side, there is a bolt hidden behind the ECU itself. It is also advisable to remove or cover the front fender at this point to prevent damage while disassembling the unit.

TIP:
The plastic console panels to the left and right of the meter do not need to be removed. However, there is a plastic dart on either panel that needs to be lifted from the side panels prior to removal.

2. Disconnect the negative battery cable.
3. At the starter relay (solenoid), located near the battery, disconnect the primary lead that goes from the relay to the starter motor.

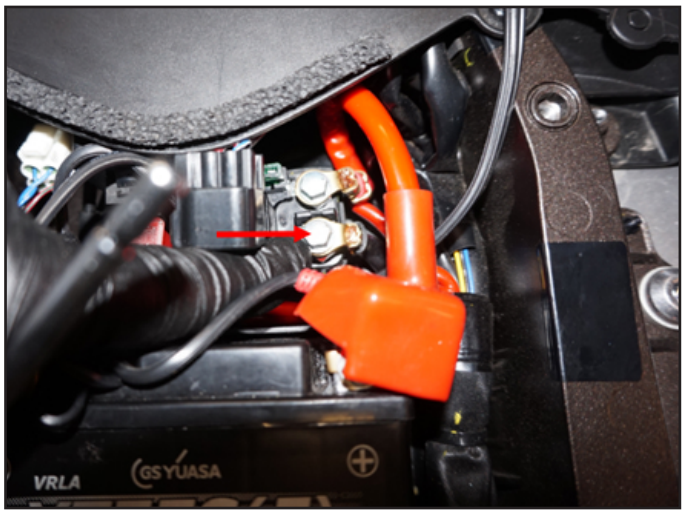

4. With the engine at room temperature, remove the radiator cap then remove the coolant drain bolt located at the water pump.

TIP:
Removing the lower heat shields from the exhaust before draining the coolant will help reduce spillage.

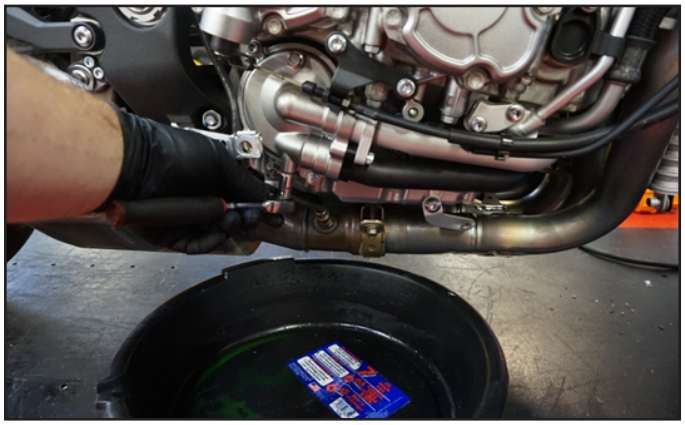

5. Remove the engine oil drain bolt and oil filter.
6. Disconnect the oil lines from the oil cooler and remove the oil cooler assembly.

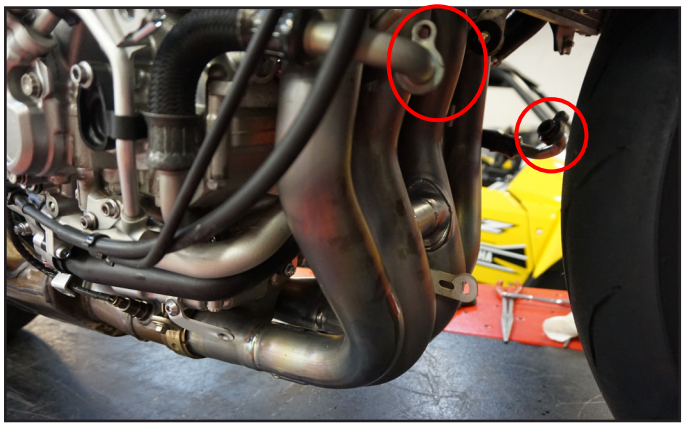

7. Disconnect the EXUP cables from the exhaust. Note that the black colored cable end is on the top and the silver cable end is the bottom for re-assembly. Next, remove the exhaust system from the headers back.

8. Remove the oil cooler bracket and water pipe mounting bolt from the crankcase.

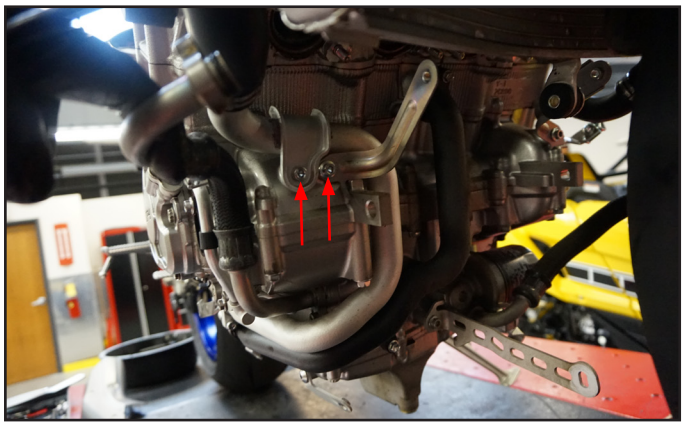

9. Disconnect the cooling pipe from the water pump by removing the retaining bolt. Remove the small diameter hose from the top right of the radiator **taking care to not bend the radiator fitting.** Disconnect the clutch cable at the cable retaining bracket and detach the cable from the engine.
10. Disconnect the hose from the radiator on the left side of the unit by removing the clamp from the hose. Discard this clamp, it will not be reused.

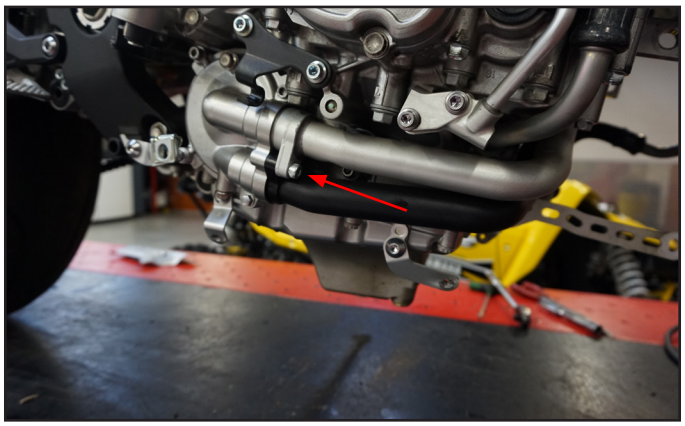

11. Unplug all of the electrical connectors on the upper left side of the radiator located on the plastic rectifier bracket, then remove the 2 bolts retaining the rectifier bracket to the radiator.
12. Remove the radiator from the unit being careful to not scratch the front fender.

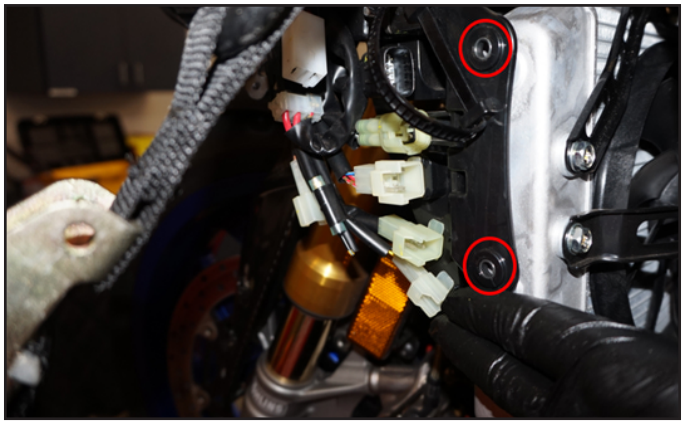

13. Disconnect the secondary injector wiring couplers and fuel line from the air box and remove the air box lid and air filter.

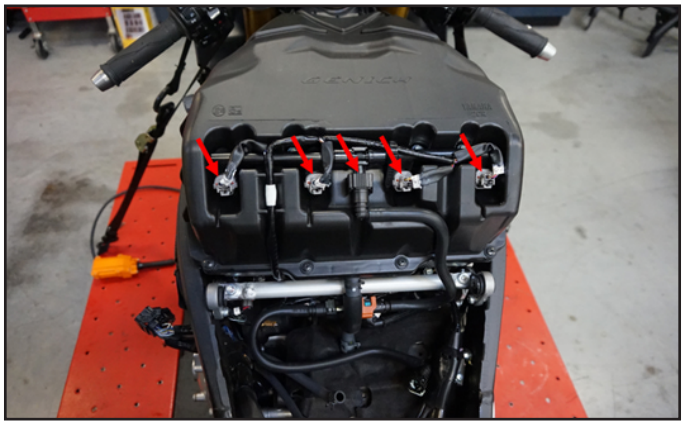

14. Depress the YCC-I intake funnels and remove the 6 allen head bolts that attach the air box to the throttle bodies. Unplug the YCC-I servo coupler, Crankcase breather hose, AIS hose, and remove the air box.
15. Disconnect the electrical connectors and the vacuum hose from the throttle bodies. Using an allen socket with extension, loosen the 4 clamps that secure the throttle bodies to the intake manifolds by inserting the tool from below the frame on either side.

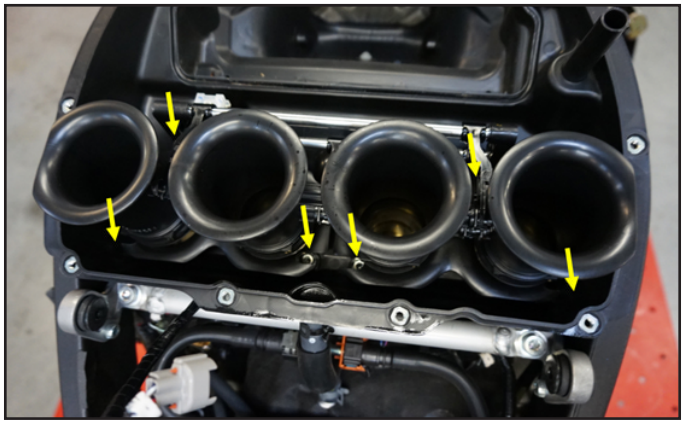

TIP:
removing the throttle cables is not necessary. Once the throttle bodies are removed, there is enough space to rotate the throttle bodies to the side. Use a towel or tank protector to prevent scratching or other components where the throttle bodies are placed.

16. Remove the ignition coils and AIS assembly from the valve cover.

17. Disconnect all electrical connections below the fuel tank area/top of the engine. Pay close attention to verify all of the connectors were disconnected to prevent damage to sensors when removing the engine. The coolant temperature sensor (back of the cylinder head) and the gear position sensor (top of crankcase above countershaft sprocket area) are particularly easy to overlook. Remove the starter motor cable which was disconnected in step 3 from the tail area and set the excess wire on top of the engine.

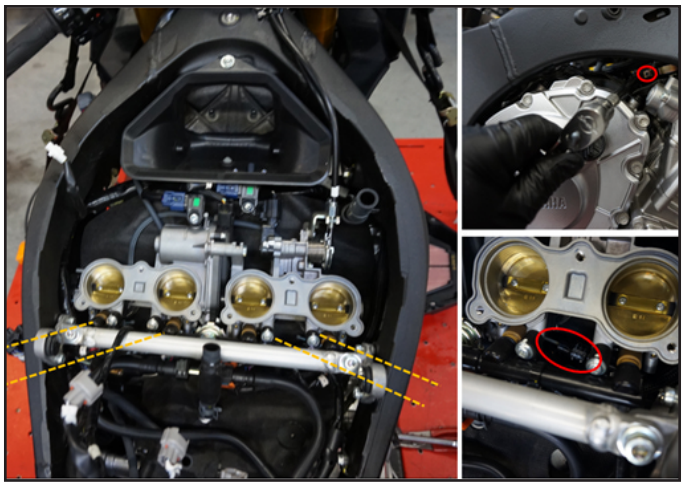

TIP:
On the YZF-R1M model, it is not necessary to unplug the 2 connectors for the rear shock.

18. On the left side of the unit, unplug the electrical connections for the stator, oil pressure sensor, and QSS shift swich located inside of the black rubber boot. Remove the shifter from the end of the shift shaft splines, and remove the side stand assembly. Next remove the countershaft sprocket cover and countershaft sprocket. If needed, loosen the rear axle and adjust the drive chain to gain additional chain slack to aid in removing the countershaft sprocket from the engine.

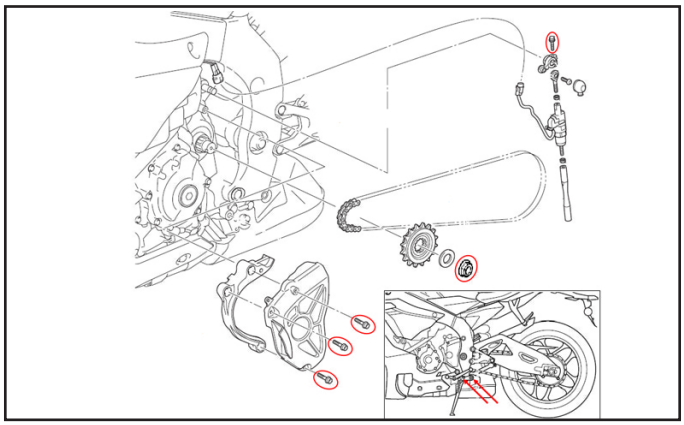

19. Have a safe area to place the engine prepared, use a large piece of cardboard or other soft material where the engine is place to prevent damage to the engine covers. When the engine is removed, rotate the engine so it is oriented upside down on the previously mentioned work surface. Place a suitable jack or stand under the engine. When lowering the engine from the frame, it is best to use 2 people. Remove the 2 upper engine mounting bolts, then remove the nuts from the 2 rear engine mounts. Retract the 2 rear bolts that secure the engine to the frame and loosen the 2 collars inside the frame using the special tool. Lower the engine from the chassis carefully while checking for wiring connections or hoses that may have been overlooked in earlier steps. It may be necessary to rotate the engine slightly so the drive chain is free of the transmission counter shaft.

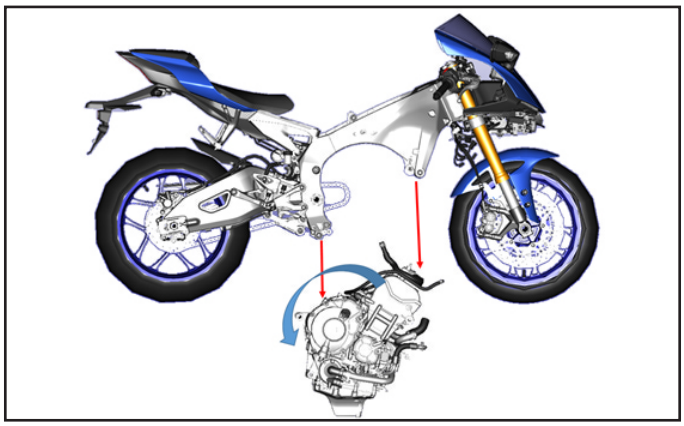

NOTE: The adjacent photo shows the engine correctly positioned after removal. The remainder of this procedure can be performed with the engine in this position.

ENGINE

NOTE: The YZF-R1 and YZF-R1M are equipped with magnesium engine covers with aluminum hardware. Scratches to any of the engine covers will require touch-up or replacement. The aluminum bolts used on the engine covers are one time use only. Do not attempt to reuse any of these bolts. Use a torque wrench following the proper procedures outlined in the service manual to install this hardware.

20. Remove the generator cover from the left side of the engine and discard the bolts. It is NOT necessary to remove the flywheel.

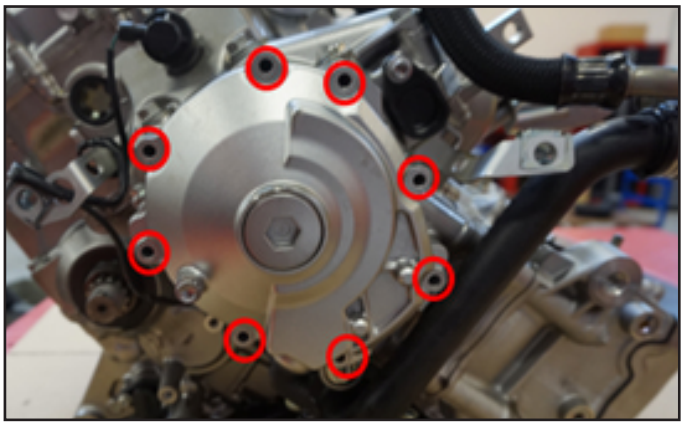

21. Remove the timing cover from the right side of the engine and discard the bolts. Make sure to reinstall the cam chain tensioner guide pivots if the come off with the engine cover.

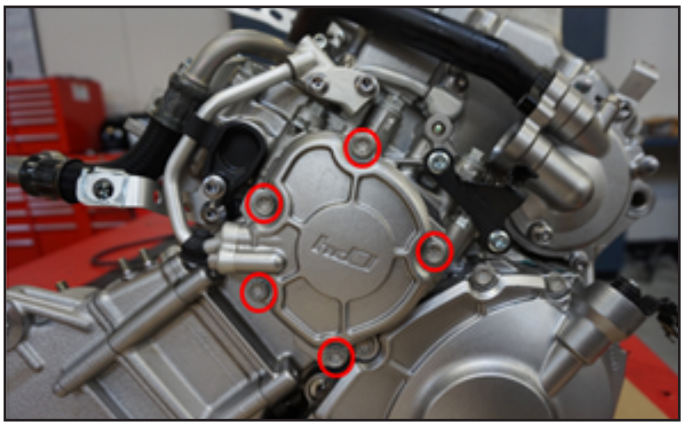

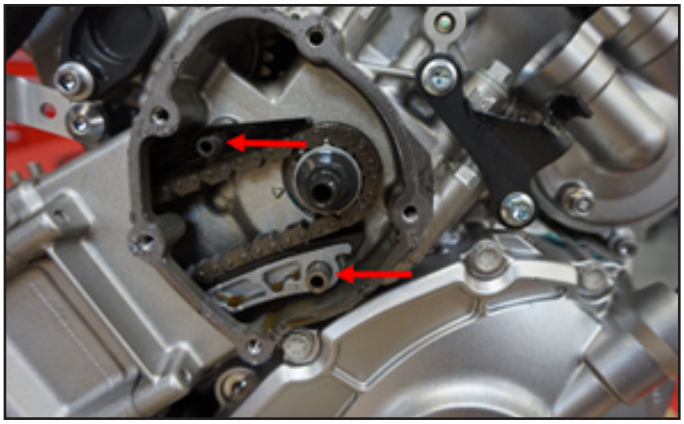

22. Remove the oil pipes, water pump, and coolant pipe.

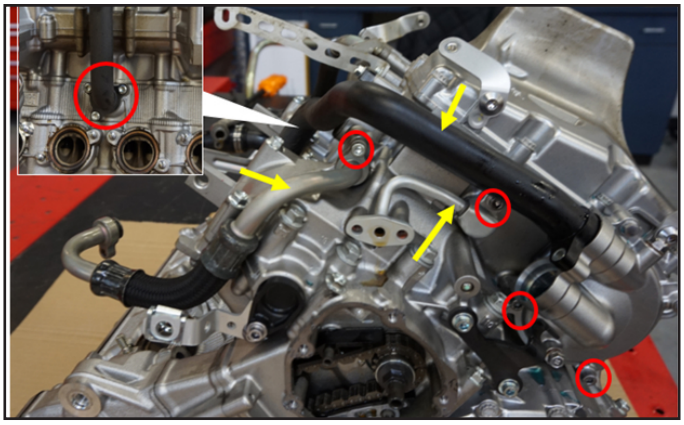

23. Remove the oil strainer cover (oil pan) and discard the mounting hardware.

TIP:
Loosen each bolt 1/4 of a turn at a time, in stages, and in a crsscross pattern. After all the bolts are fully loosened, remove them.

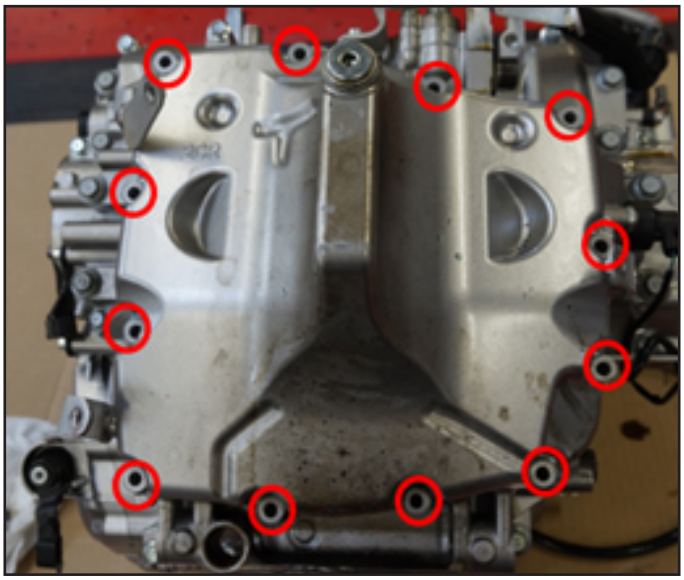

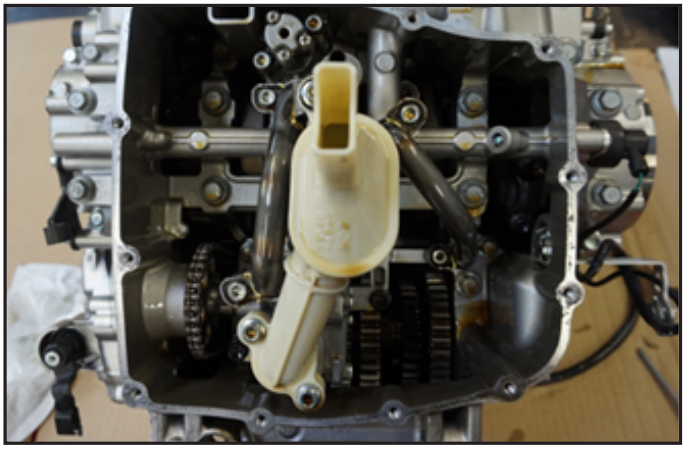

24. On the right side of the engine, remove the clutch cover and discard the mounting hardware. Next, remove the 3 bolts that secure the clutch springs and remove the clutch plates.

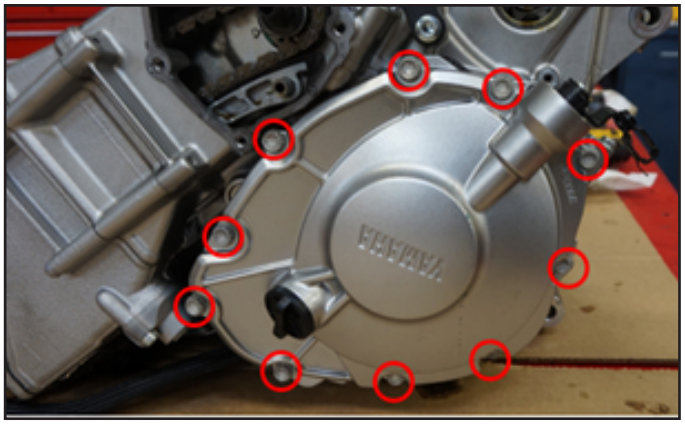

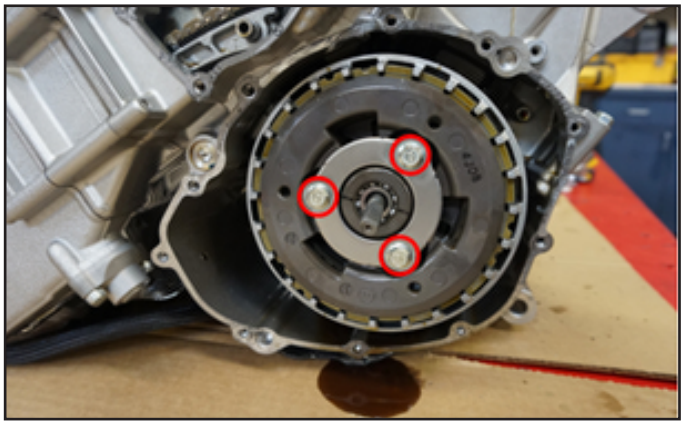

25. Using a clutch holder and appropriate hand tools (breaker bar), loosen then remove the clutch hub nut. Do **NOT** use power tools to disassemble the clutch, damage will result. Remove the remainder of the clutch assembly. A universal clutch holder (shown in the adjacent photo) is available through K&L Supply (P/N: YM-91042).

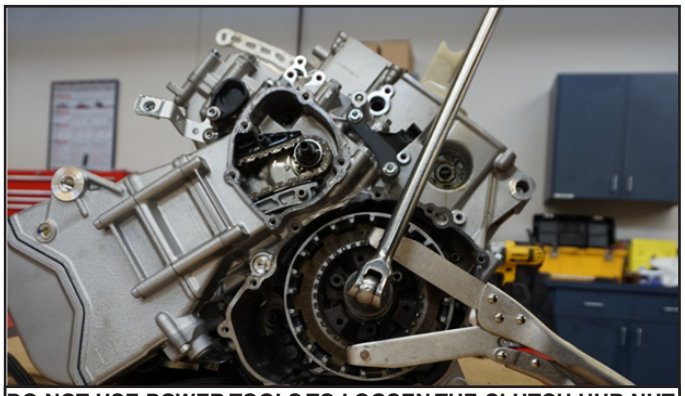

DO NOT USE POWER TOOLS TO LOOSEN THE CLUTCH HUB NUT, THIS MODEL IS EQUIPPED WITH A SLIPPER CLUTCH AND DAMAGE WILL RESULT. USE AN APPROPRIATE CLUTCH HOLDER AND HAND TOOLS.

TIP:

a. Check if crankshaft web or connecting rod #1 does not come before the primary driven guide.
b. Adjust the position of the crankshaft web and the connecting rod by turning the crankshaft if necessary.

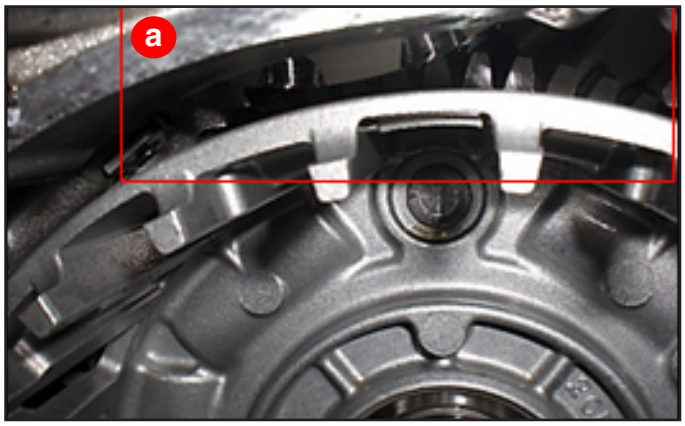

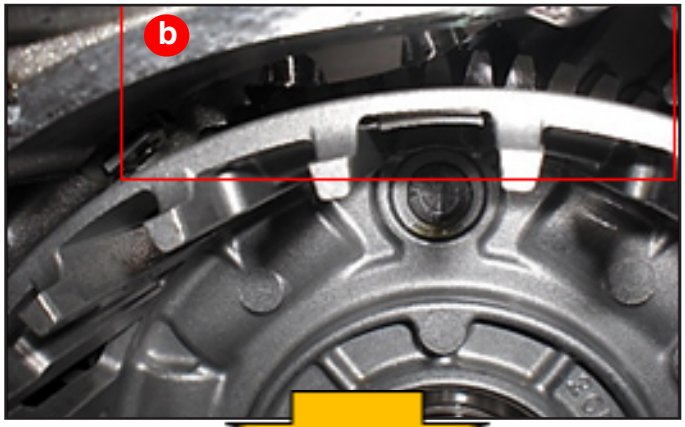

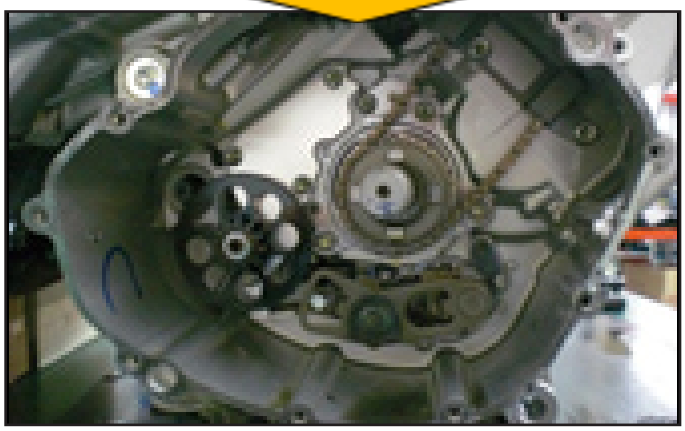

26. Remove the oil pump chain guide, starter idler gear, and shift shaft. Note that the shift shaft has an e-clip located on the opposite side of the engine. Take care to watch for the washer from the shift shaft, it may stick to the crankcase. Keep this washer for reuse upon assembly.

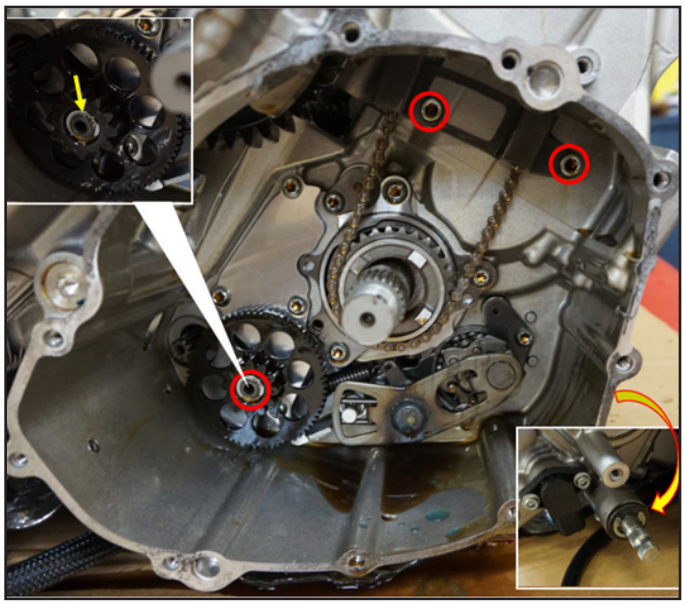

27. Remove the oil pump drive chain from the oil pump gear. Remove the 3 bolts from the oil pump assembly and the 3 bolts from the oil pipes shown, then remove the oil pump with the pipes attached as an assembly. Take care to not lose the oil pump dowel pins and watch for O-rings around the oil delivery pipes that may stick in the crankcase when removing them.

TIP:

a. Remove the oil pump chain from oil pump sprocket before oil pump removal.

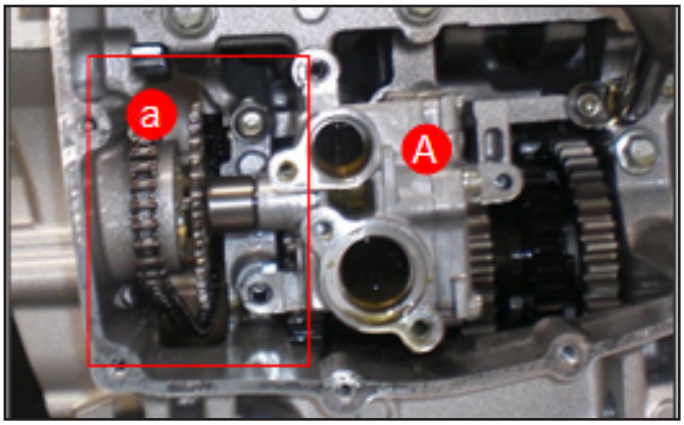

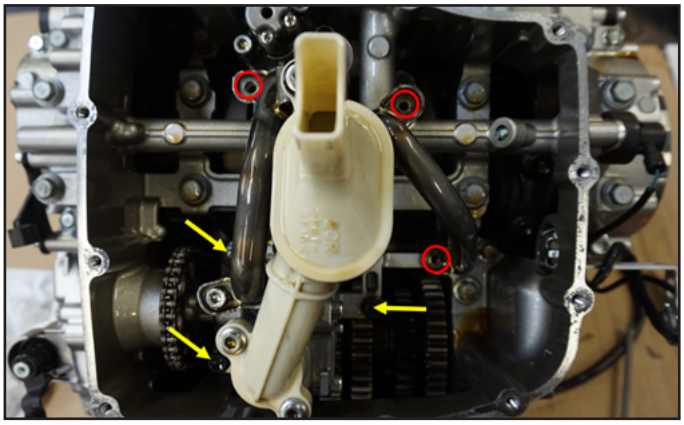

28. Separate the case halves by loosening, then removing the 40 fasteners in the order shown. Gently use a soft-faced mallet on the reinforced areas of the crankcase to release the 2 halves evenly. Do not use excessive force. Lift the lower portion of the crankcase off taking care to not dislodge any of the crank journal or counter balancer bearings out of place. If any of the bearings come out, be careful to reinstall them into the correct positions on the case half.

TIP:

- Loosen each bolt ¼ of a turn at a time, in stages and in a crisscross pattern. After all of the bolts are fully loosened, remove them.
- Loosen the bolts in the proper sequence as shown.
- The numbers embossed on the crankcase indicate the crankcase tightening sequence.

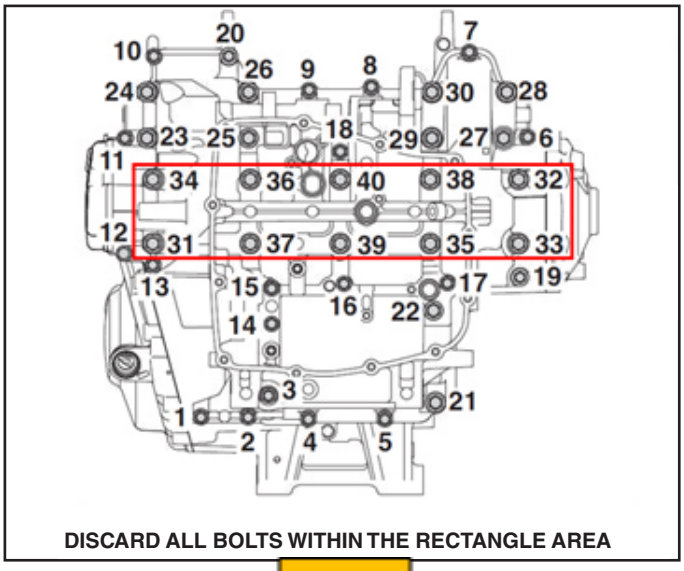

NOTICE:

Tap on one side of the crankcase with a soft-face hammer. Tap only on reinforced portions of the crankcase, not on the crankcase mating surfaces. Work slowly and carefully and make sure the crankcase halves separate evenly.

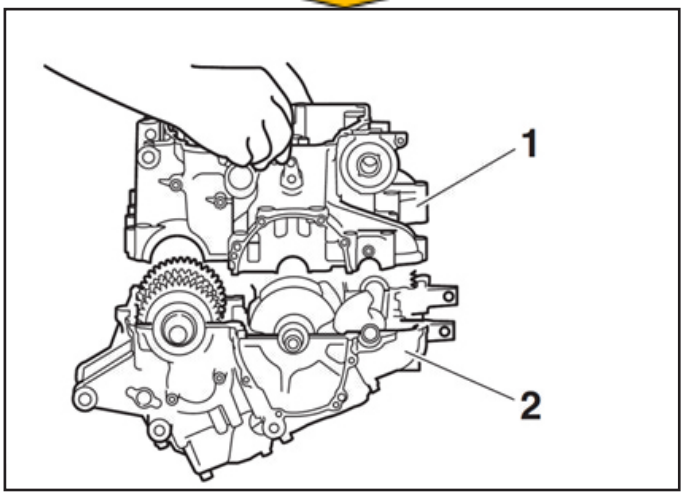

29. Remove the countershaft and crankcase dowel pins.

Remove:
- Dowel pins “A”
- Drive axle assembly “B”

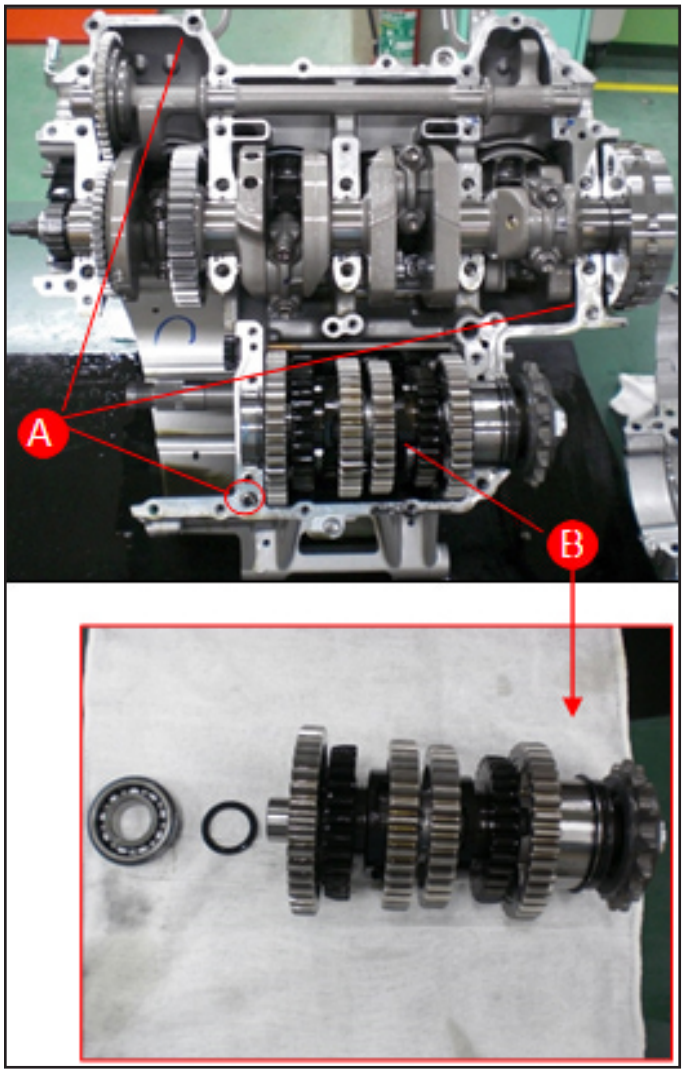

30. Remove the retainers that cover the shift drum and shift fork shafts and remove the shift drum, shift forks shafts, and shift forks. Take note of the orientation and position of the forks for reassembly. There is a spring located inside of the shift fork shaft on either end, do not lose these. Next, remove the 3 bolts retaining the transmission main shaft.

31. Remove shift drum retainer “A” and “B.”

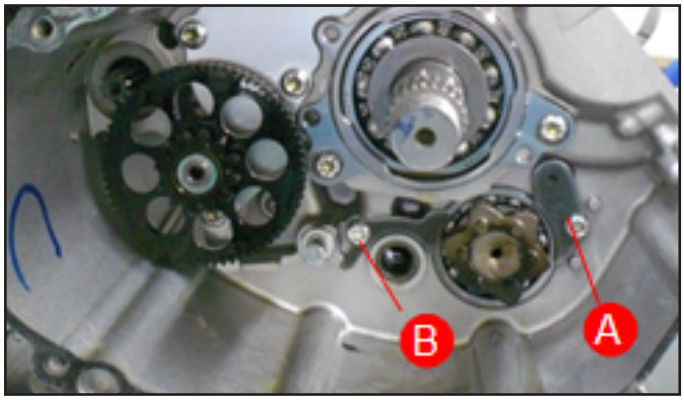

32. Remove:
- Shift fork guide bars
- Shift fork-L
- Shift fork-R
- Shift drum assembly
- Shift fork-C

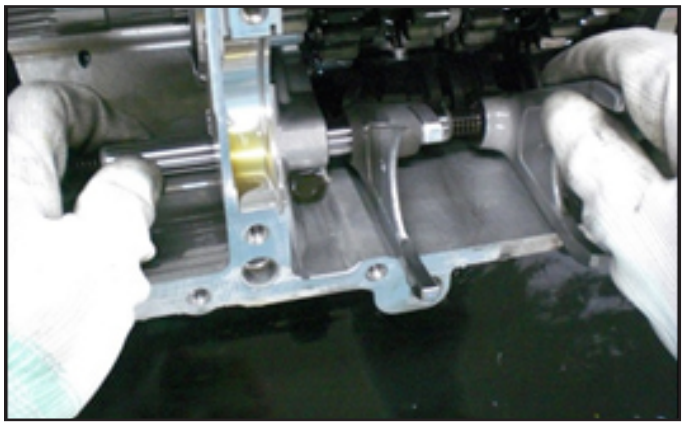

33. Remove starter clutch idle gear.

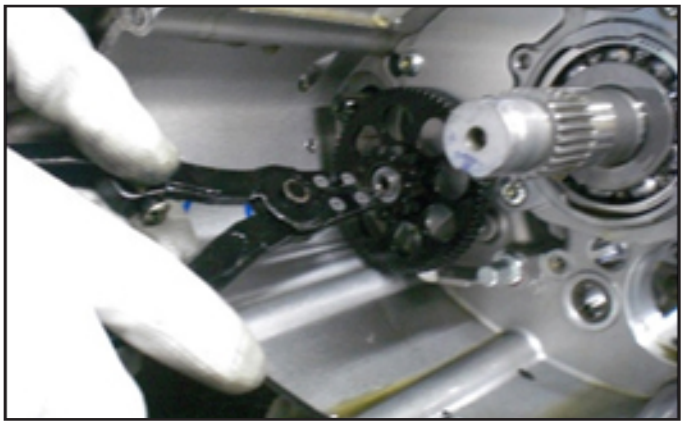

34. Remove the main axle assembly.

TIP:

- Insert two bolts (M6) "A" into the main axle assembly bearing housing "B."
- Tighten the bolts until they contact the crankcase surface.
- Continue tightening the bolts until the main axle assembly comes free from the upper crankcase.
- Do **NOT** use power tools to tighten.

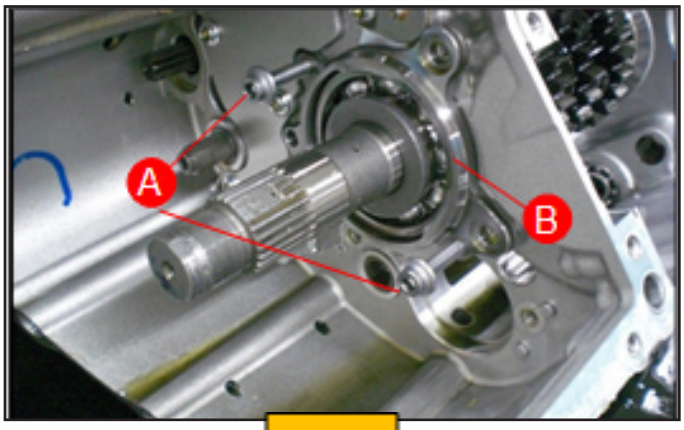

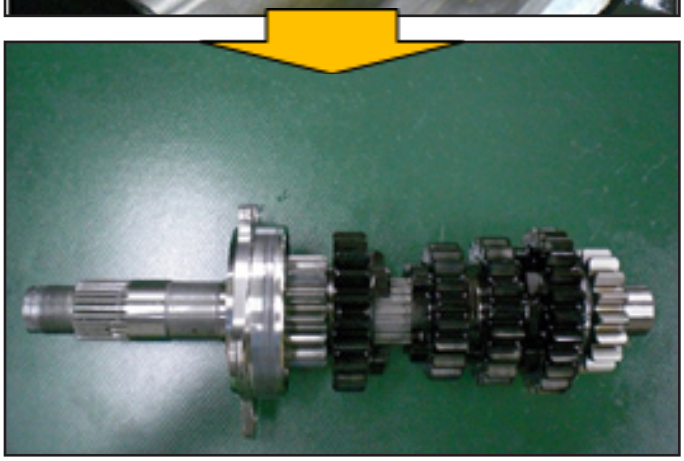

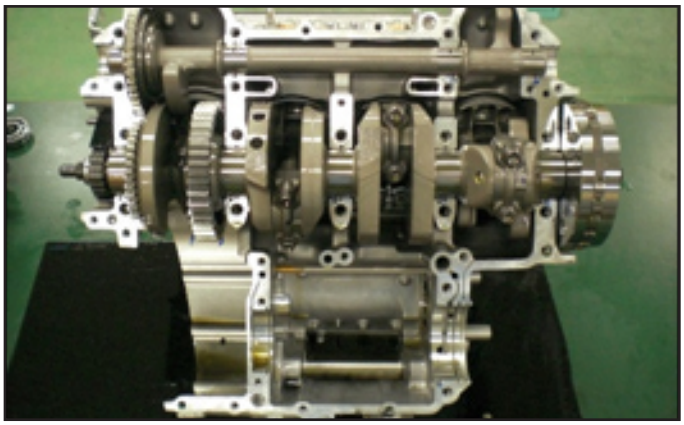

35. Replace the main assembly and drive axle in the Kit part. Then, assemble by referring to the Service Manual. Just note the **Notice** below.

NOTICE:

When the bolt with LOCTITE® is removed, the LOCTITE remains in the internal thread. Clean up the internal thread by a tap.
Use a new bolt and apply LOCTITE to the bolt for the thread.

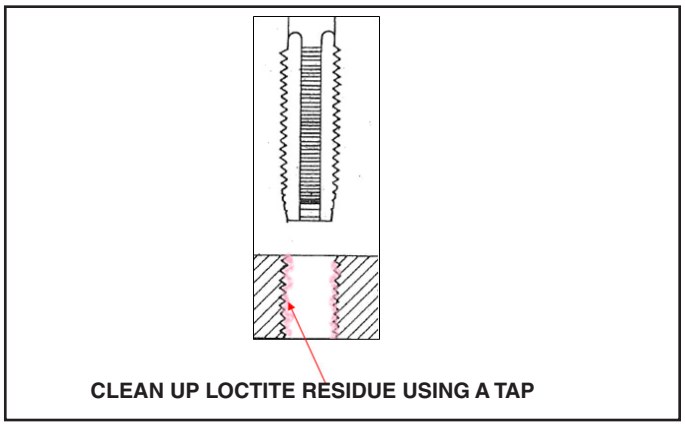

Install the Drive Axle Assembly

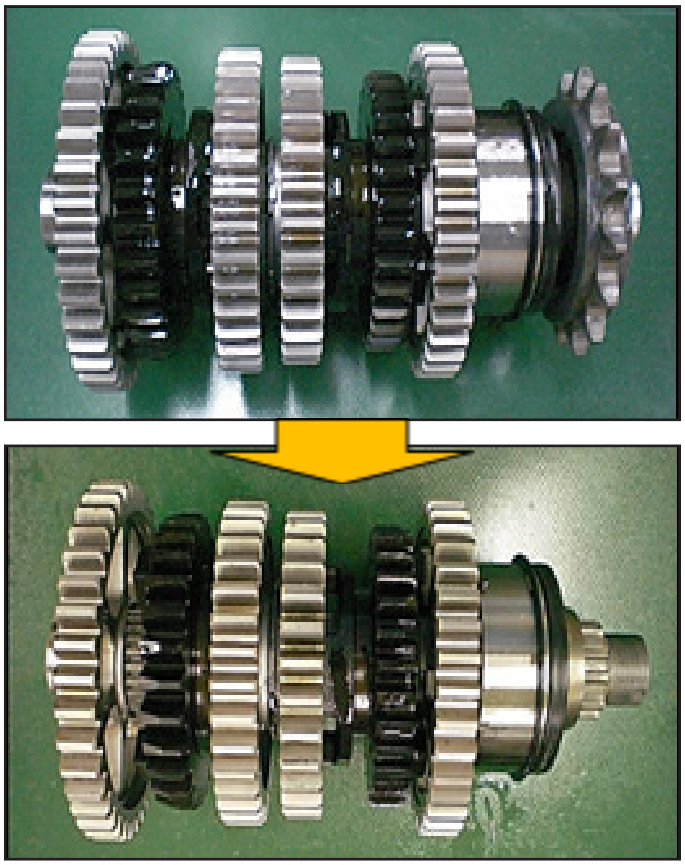

36. Make sure the projection “a” on the drive assembly is inserted into the slot in the crankcase.

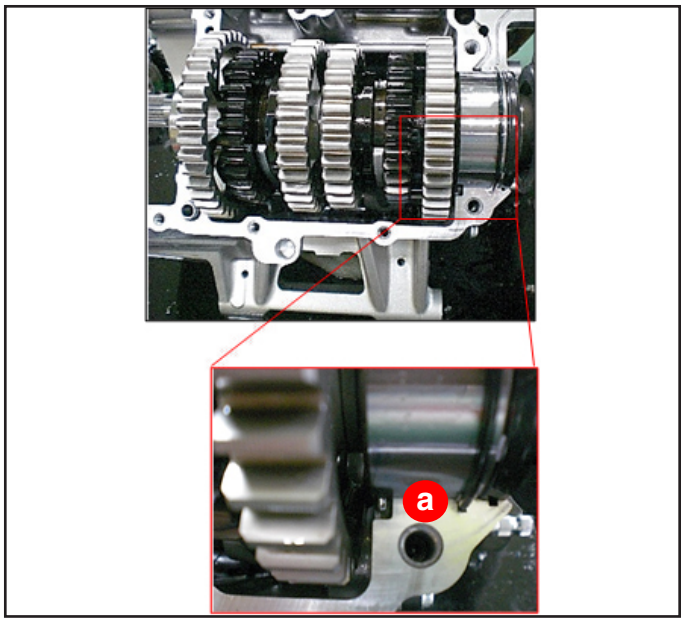

37. Perform the following:

- Apply engine oil on outer of the main axle bearing. Then, insert the main axle into the crankcase.
- Insert three bolts (M6 20mm) "A" into the main axle assembly bearing housing.
- Tighten each bolt 1/2 of a turn at a time until the bearing housing contacts to crankcase surface. During this procedure, check if the shaft can be turned smoothly.
- Remove the three bolts and tighten the three new bolts with LOCTITE by 12 Nm.
- After tighten three bolts, check if the shaft can be turned smoothly.
  If it is not smooth, remove the shaft and tap the bearing "B" to insert it into the crankcase properly and back to procedure first.

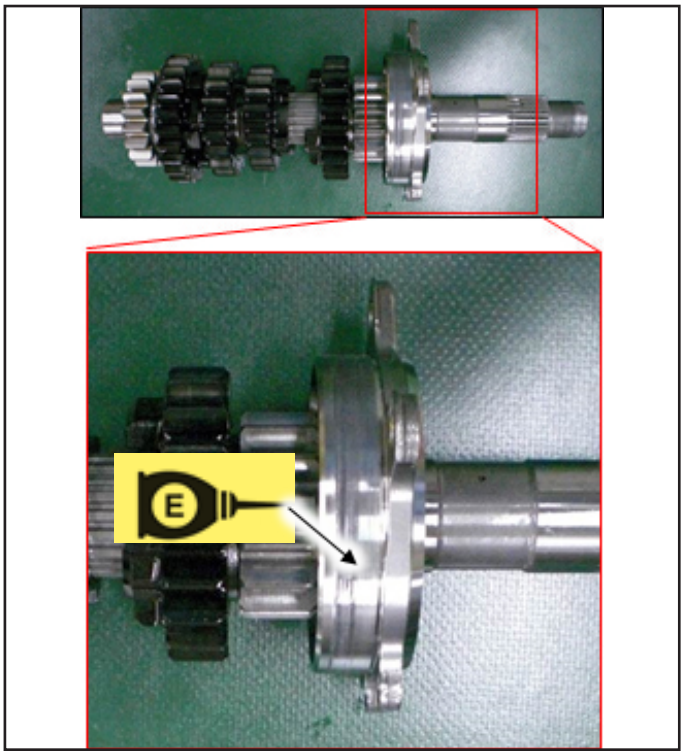

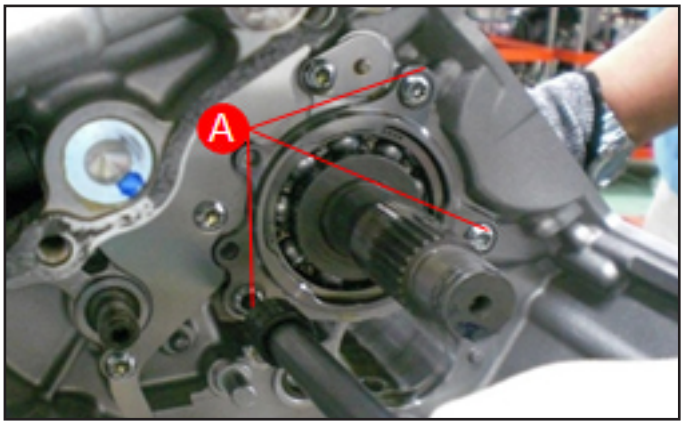

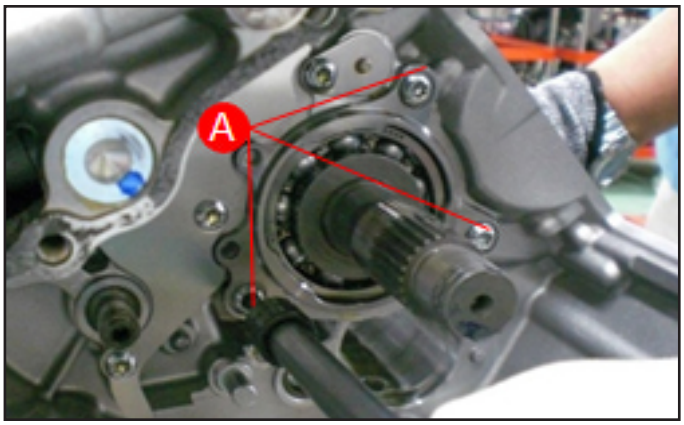

Engine and Unit Reassembly Tips

Assemble the engine in the reverse order of disassembly using the Service Manual (LIT-11616-28-52) as a guide. Read and understand the following tips for reassembly prior to beginning assembly.

- When installing the shift drum into the crankcases, be cautious inserting the indexed end of the shaft into the gear position sensor. Do not force the shift drum into position.
- Double check that all main journal and counter balancer bearings are in their correct locations and add a light coating of oil to the bearing surfaces before assembling the crankcase halves.
- Apply sealant only in the areas designated in the diagram adjacent, do not apply sealant to the areas where it is possible to block an oil passage.

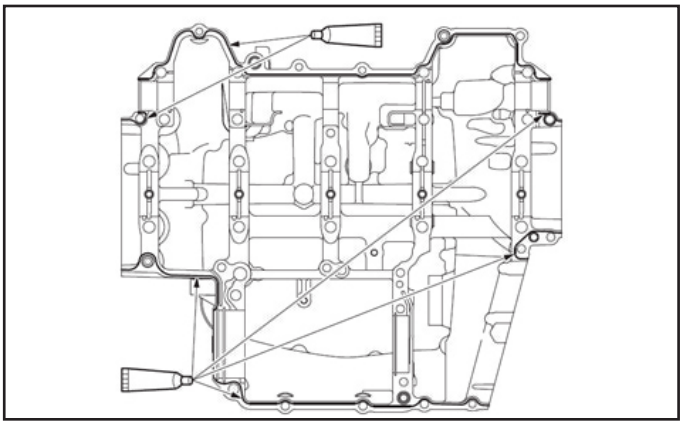

- When installing the crankcase bolts, install and torque the bolts in the correct order and to the correct torque specification.

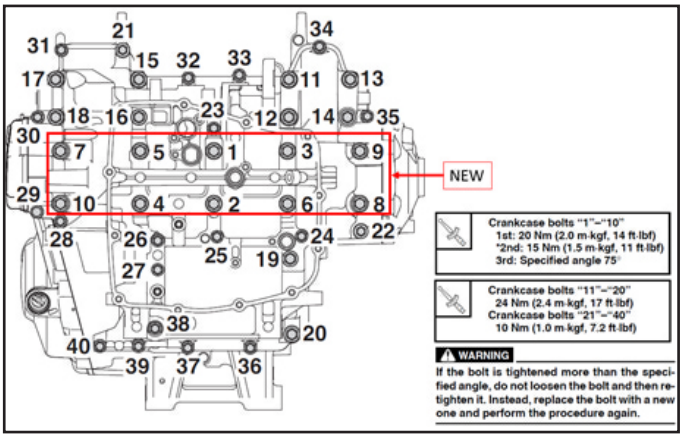

- When assembling the clutch, be aware that the outermost 3 plates (2 fiber and one steel) and innermost 1 fiber plate are different than the others. Verify the oil pump gear is properly aligned to the primary gear and that the oil pump chain is correctly installed prior to tightening the clutch hub nut. Do this BEFORE installing the oil pan so the oil pump chain can be visually inspected and verified. Do not reuse the clutch hub nut. Torque all fasteners to specification.

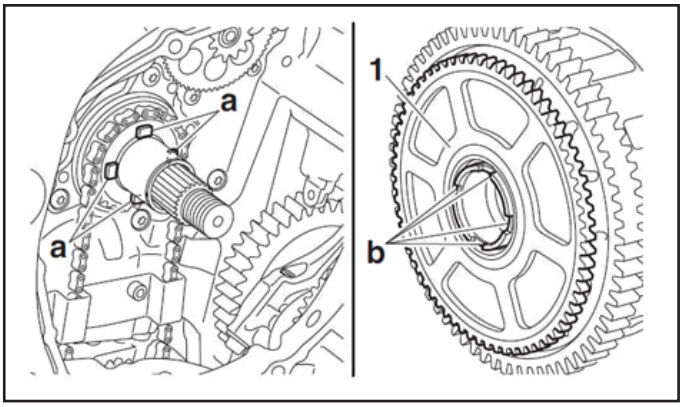

TIP:

When installing the clutch housing assembly, turn the crankshaft so the crankshaft web "c" cannot be seen.

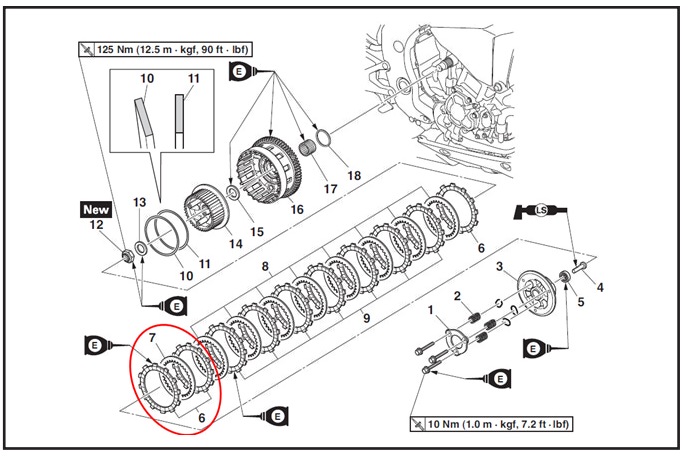

NOTE: Some clutch noise, when operating the unit for the first time after reassembly, is normal. This noise should subside within the first few miles:

INSTALLING THE CLUTCH

TIP:
After assembling the clutch assembly, a noise like a dry-type clutch might occur with the gear position in neutral and half clutch. This is due to the clutch dragging by engine oil when assembled. The pressure plate makes chattering noise by the clutch dragging and noise occurring between the pressure plate cam and the clutch boss cam.This noise will disappear after riding a few miles as engine oil between the clutch plate and friction plate will be reduced to optimum condition by the clutch operation.

- Do not reuse ANY of the aluminum crankcase cover bolts. Torque these fasteners to the specified torque using the following steps:
  1. Tighten each bolt to 6 Nm (0.6 mkg, 4.3 ft lb) - tighten in order starting at bolt #1.
  2. Loosen bolt #1 and then retighten to 3 Nm (0.3 m kg, 2.2 ft lb).
  3. Angle-torque the bolt to 90 degrees.
  4. Perform step 2 and 3 on the remaining bolts in the specified order.

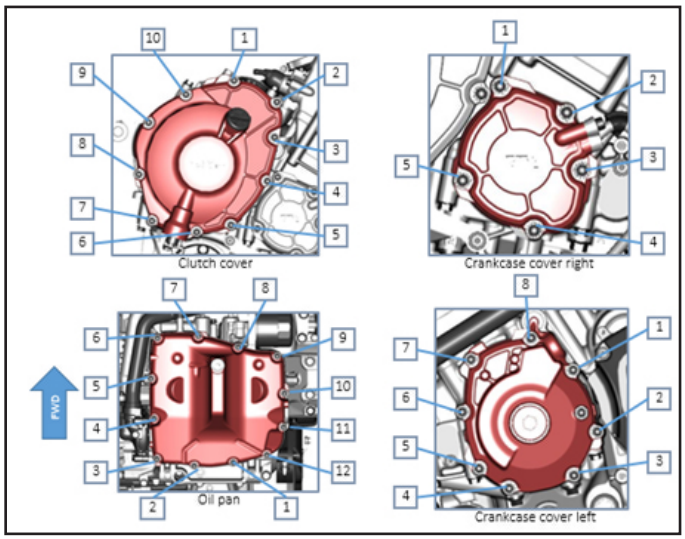

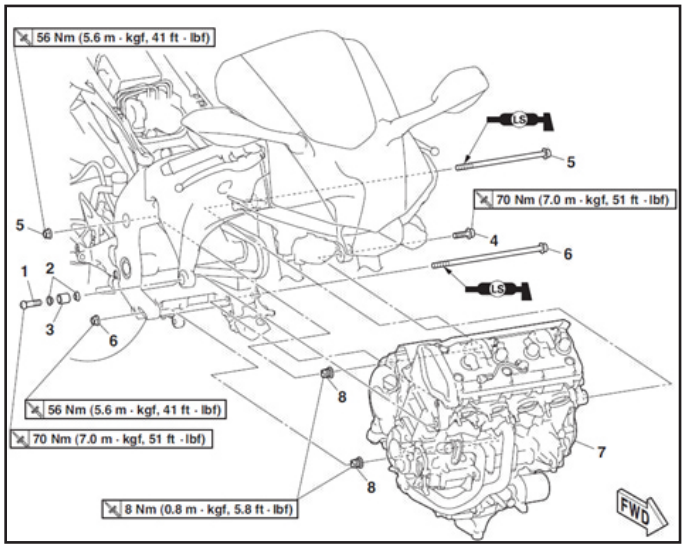

IDENTIFICATION PROCEDURE

After modifying a unit, make sure to properly record and submit the warranty claim for this safety recall to ensure not only correct reimbursement but also to update the unit's repair history in the Yamaha database. Perform a unit status inquiry in YDS to check to see if a unit is in the affected range and is modified or unmodified.

PARTS INFORMATION

Part Number	Description	Application	Qty.	Dealer Cost
90891-10271-00	YZF-R1 Transmission Kit	YZF-R1 YZF-R1M	1	
LUB-15W50-FS-12	Yamalube Full Synthetic 15W-50 Engine Oil		5 qt.	$9.75 ea.
ACC-YAMAC-BL-32	Yamacool High Performance Antifreeze		3 qt.	$5.80 ea.

The kit contains the main and drive axle assemblies, plus the gaskets, circlips, washers, seals, O-rings, fasteners, oil filter, and other parts necessary to complete the modification.

WARRANTY INFORMATION

The owner of each registered unit will receive a letter announcing this campaign. The customer's letter includes the Primary ID and Recall Number.

The modification is authorized for all affected vehicles, both sold and unsold, regardless of ownership or warranty status. You do not need the customer's letter to perform the modification or to file for reimbursement.

Submit a Recall Claim for the labor as described below using Campaign Number 9900xx, and choose Modification. The labor allowance is **15.8** hours.

YDS:
To submit your Recall Claim in the new warranty system on YDS, go to *Service>Warranty Claims / Authorization>New>Warranty Claim*. From the menu, select *Recall/ Service-Per-Bulletin Claim*.

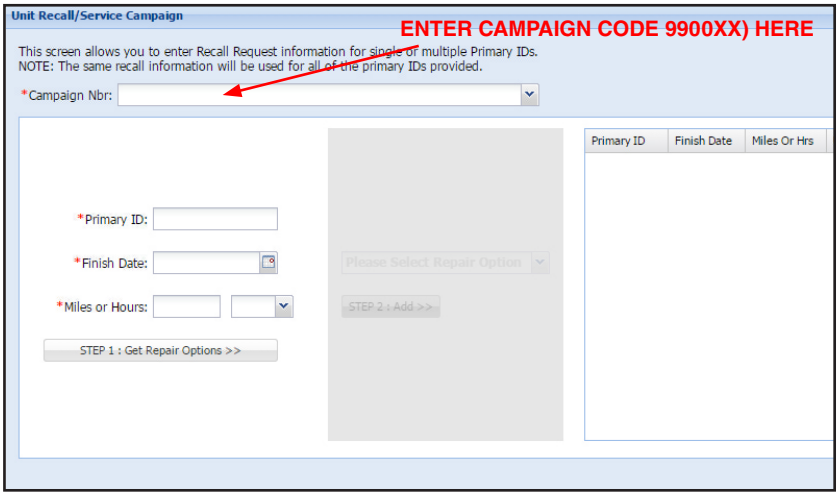

MAIL:
If it is necessary to mail your claim, complete a Recall Reimbursement Request (LIT-11790-00-03) as shown below:

Dealer Number _____ **Dealer Name** _____

Recal Number	Primary I.D.	Date Completed	Status
990099	RH06Y—0000XXX	10—22—2015	M I
	—		M I
			M I

If you have any questions about proper procedures for Factory Modification Campaigns, see Chapter 7 in your **Warranty and Y.E.S. Handbook** (LIT-11760-00-08).